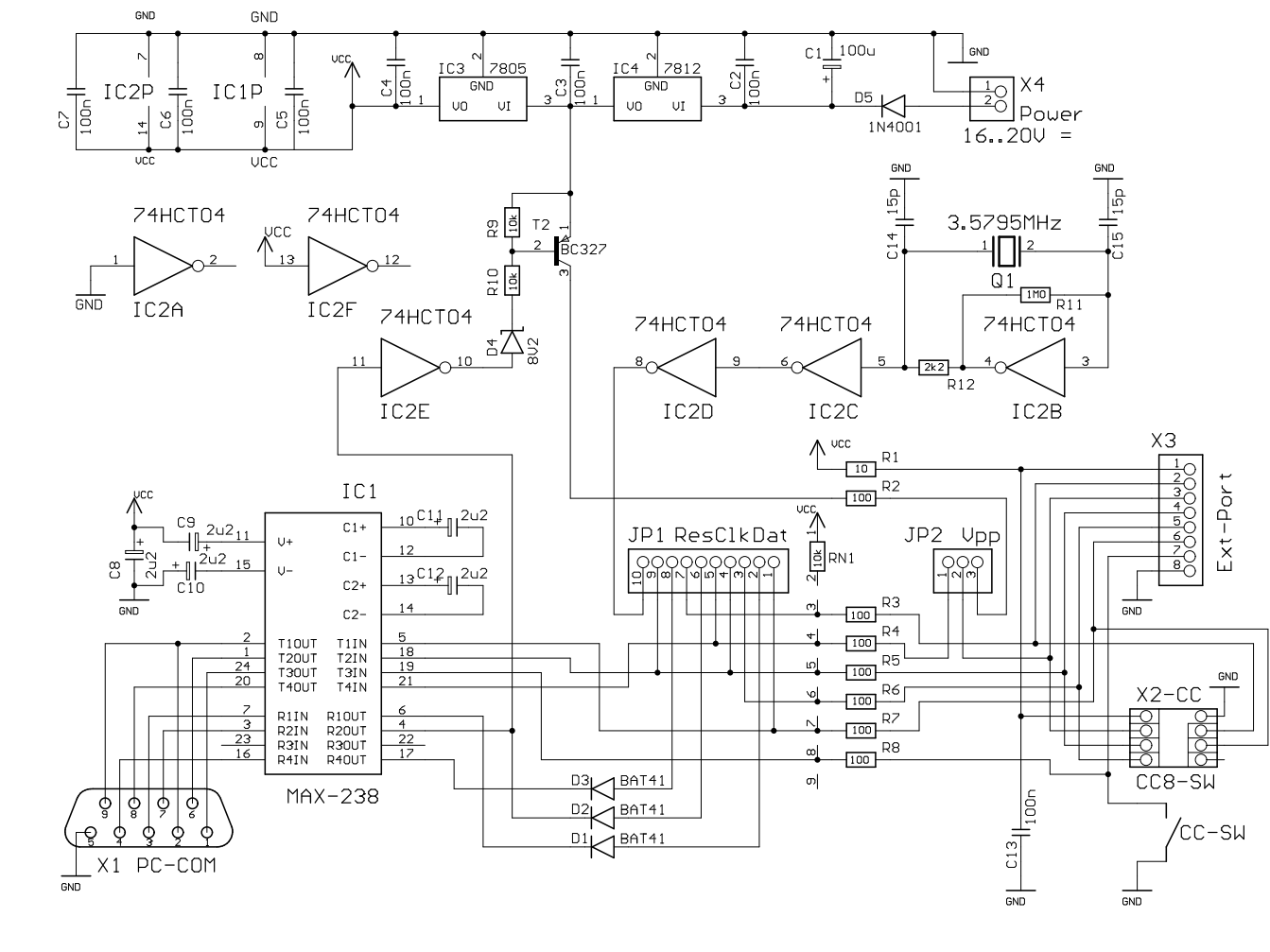
GND
VCC
IC2P
IC1P
C7 100n
C6 100n
C5 100n
C4 100n
IC3 7805
VO VI
C3 100n
IC4 7812
C2 100n
C1 100u
D5 1N4001
X4
Power
16..20V =
74HCT04
IC2A
IC2F
IC2E
IC2D
IC2C
IC2B
R9 10k
R10 10k
T2 BC327
D4 8V2
C14 15p
C15 15p
3.5795MHz
Q1
R11 1M0
R12 2k2
IC1
MAX-238
C8 2u2
C9 2u2
C10 2u2
C11 2u2
C12 2u2
T1OUT T2OUT T3OUT T4OUT
T1IN T2IN T3IN T4IN
R1IN R2IN R3IN R4IN
R1OUT R2OUT R3OUT R4OUT
C1+ C1- C2+ C2-
V+ V-
X1 PC-COM
D1 BAT41
D2 BAT41
D3 BAT41
JP1 ResClkDat
RN1 10k
JP2 Vpp
R1 10
R2 100
R3 100
R4 100
R5 100
R6 100
R7 100
R8 100
X3
Ext-Port
X2-CC
CC8-SW
CC-SW
C13 100n